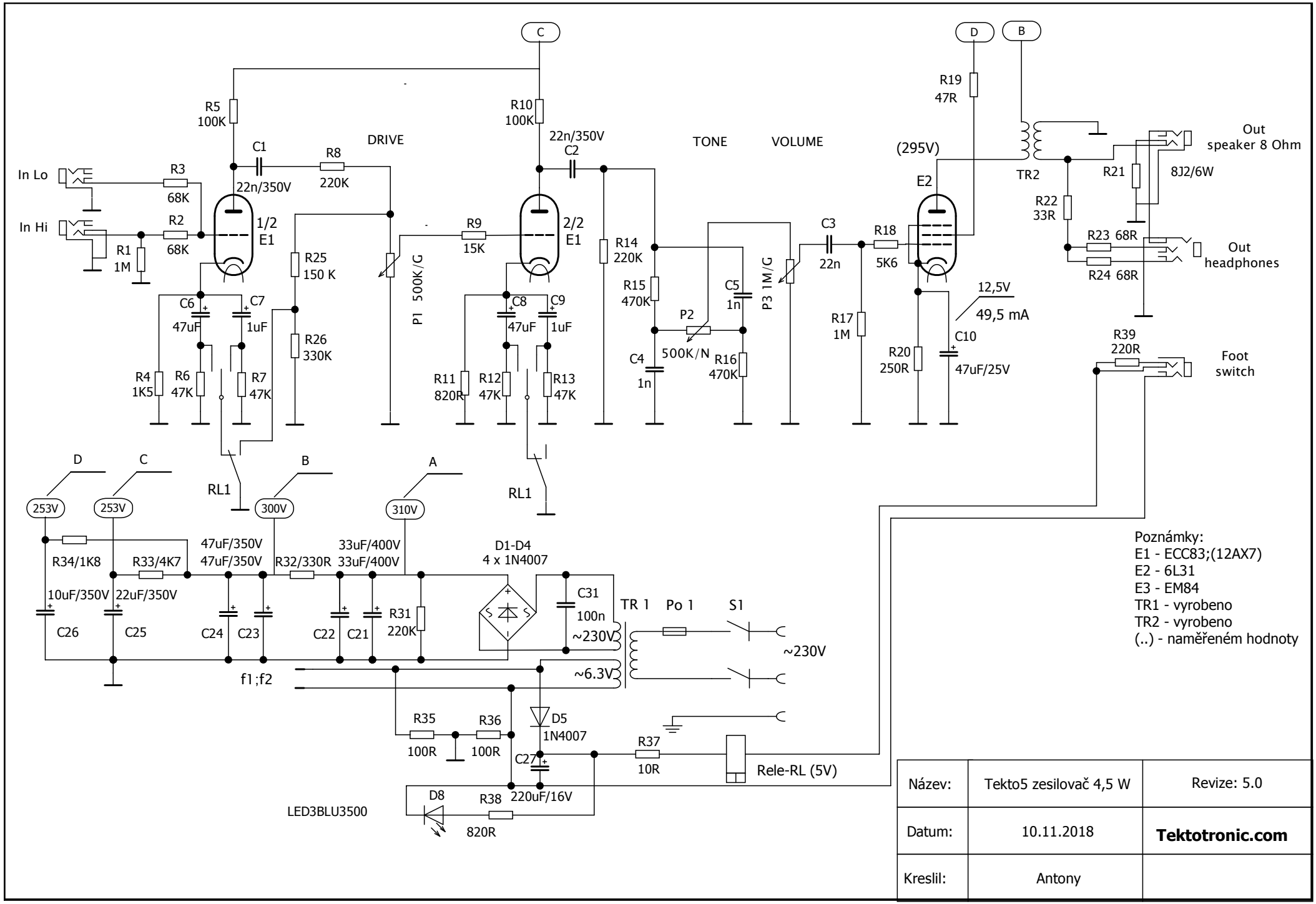
C
D
B
R19
47R
R5
100K
R10
100K
C1
22n/350V
R8
220K
DRIVE
22n/350V
C2
TONE
VOLUME
(295V)
TR2
Out
speaker 8 Ohm
In Lo
R3
68K
In Hi
R2
68K
R1
1M
1/2
E1
R25
150 K
R26
330K
P1 500K/G
R9
15K
2/2
E1
R14
220K
R15
470K
P2
500K/N
C4
1n
R16
470K
C5
1n
P3 1M/G
C3
22n
R18
5K6
E2
R17
1M
R20
250R
C10
47uF/25V
12,5V
49,5 mA
R21
8J2/6W
R22
33R
R23 68R
R24 68R
Out
headphones
R39
220R
Foot
switch
C6
47uF
C7
1uF
R4
1K5
R6
47K
R7
47K
C8
47uF
C9
1uF
R11
820R
R12
47K
R13
47K
RL1
RL1
D
C
B
A
253V
253V
300V
310V
R34/1K8
R33/4K7
47uF/350V
47uF/350V
R32/330R
33uF/400V
33uF/400V
D1-D4
4 x 1N4007
10uF/350V
22uF/350V
C26
C25
C24
C23
C22
C21
R31
220K
C31
100n
TR 1
Po 1
S1
~230V
~230V
~6.3V
f1;f2
R35
100R
R36
100R
D5
1N4007
C27
220uF/16V
R37
10R
Rele-RL (5V)
D8
LED3BLU3500
R38
820R
Poznámky:
E1 - ECC83;(12AX7)
E2 - 6L31
E3 - EM84
TR1 - vyrobeno
TR2 - vyrobeno
(..) - naměřeném hodnoty
Název:
Tekto5 zesilovač 4,5 W
Revize: 5.0
Datum:
10.11.2018
Tektotronic.com
Kreslil:
Antony